TO-209AC (TO-94) for ST083S and ST103S Series
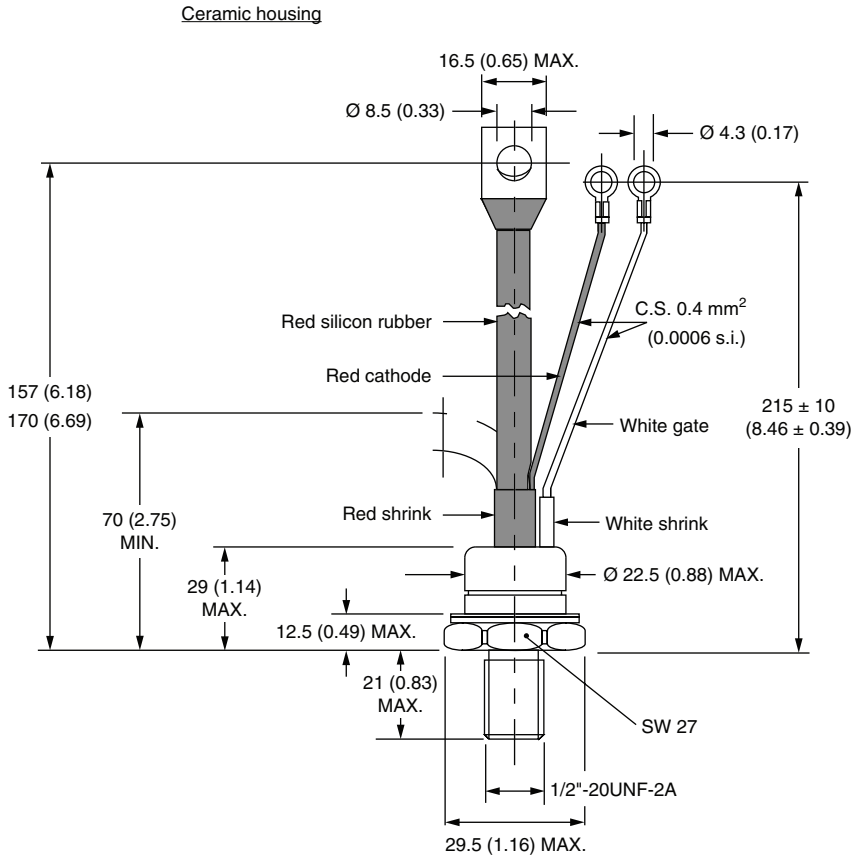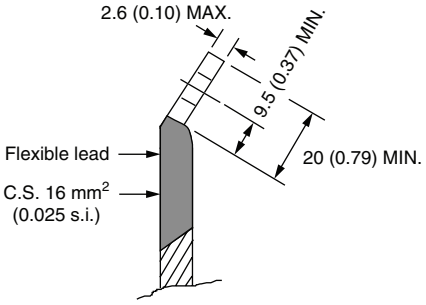
DIMENSIONS in millimeters (inches)